Marshall CV620-WH4/BK4 Quick Installation Guide

1. Installation Using Ceiling or Wall Mount

1. Prepare parts and equipment required for installation

- Metal Plates A and B
- M3 Screws (8x Silver, 2x Black)
- Standard Mounting Hardware (Drill, Screwdriver, ladder, etc.)

1.2 Installation Steps

1. Adjust desired camera resolution using the DIP Switch setting prior to installation (refer to 2. DIP Switch Setting).
2. Attach Metal Plate A to camera base using supplied M3 screws (silver).

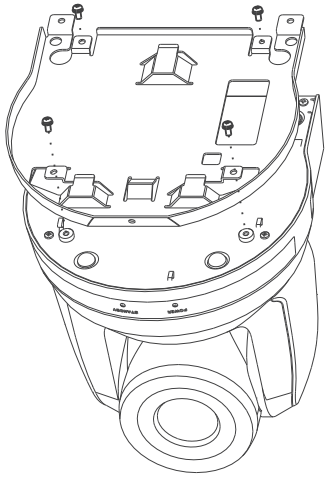

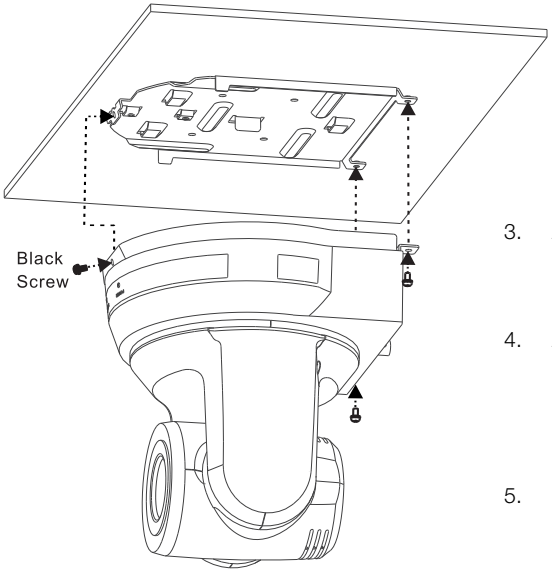

3. Attach Metal Plate B to ceiling or wall using proper mounting hardware.
4. Attach Camera (with Metal Plate A) to Metal Plate B, and slide to the right to lock the plates in place.
5. Secure the installation with 2x M3 screws (silver), and one M3 (black) screw.

NOTE: Please be sure to use proper mounting hardware, and ensure that the mounting surface has obtained UL security approval.

2. DIP Switch Setting

Output Switch

SETTING	OUTPUT MODE
0	1920X1080/60p
1	1920X1080/50p
2	1920X1080/30p
3	1920x1080/25p
4	1920x1080/60i
5	1920x1080/50i
6	1280x720/60p
7	1280x720/50p
8	1280x720/30p
9	1280x720/25p
A	1080/59.94p
B	1080/59.94i
C	1080/29.97p
D	720/59.94p
E	720/29.97p
F	Reserved

IR Select

ID	SETTING
1	
2	
3	

Notes

JR101217a

Toll Free: (800) 800-6608 | www.marshall-usa.com | support@marshall-usa.com